ML7275 Spring Return Direct Coupled Rotary Actuator

PRODUCT DATA

GENERAL

The ML7275 Spring Return Direct Coupled Rotary Actuator is a control motor that provides proportional control for dampers. The actuator accepts a current or a voltage signal from any electronic controller to position a damper at any chosen point between fully open and fully closed.

FEATURES

- **Mounts directly on horizontal 3/8 in., 1/2 in., and 5/8 in. round and square damper shafts by using the appropriate insert. Most models include 1/2 in. insert.**
- **Provides 25 lb-in. running and spring return torque.**
- **Magnetic coupling eliminates need for mechanical stops or limit switch adjustments by limiting stall torque to 100 lb-in. maximum.**
- **95° stroke provides necessary compression of rubber/neoprene gaskets commonly used on 90° low leakage dampers.**
- **88 second synchronous timing can eliminate need for feedback position indication in closed-loop temperature control applications.**
- **Removable splined output hub permits premounting of hub on damper shaft, providing installation flexibility.**
- **Reversible mounting allows actuator to be used for either clockwise (cw) or counterclockwise (ccw) spring rotation.**
- **Designed for both single-point and three-point mounting, providing installation flexibility.**
- **Available with or without a time-out feature. Models without the time-out feature are designed to be used with intelligent building management system and/or controller.**
- **Standard models have two 8 mm by 12 mm long set screws for securing damper shaft. Actuator models available for various shaft sizes that allow damper shaft to operate centered inside output hub.**
- **Standard one-meter cable with color-coded leadwires allows external wire connections with 1/2 in. conduit connectors.**
- **Two or more actuators can be mounted on one damper shaft to increase output torque for use on dampers larger than 8 square feet.**
- **Models available with 0-10 Vdc or 2-10 Vdc input signal.**
- **Models available with 4-20 mA input signal.**
- **All models have 2-10 Vdc feedback signal.**

Contents

General 1
Features 1
Specifications 2
Ordering Information 2
Installation 4
Operation 9
Checkout 10

Copyright © 1996 Honeywell Inc. • All Rights Reserved

SPECIFICATIONS

Models
ML7275 Spring Return Direct Coupled Rotary Actuators.
ML7275A: Low Torque (25 lb-in.) Direct Coupled Rotary Actuator without auxiliary switches and without time-out function.
ML7275C: Low Torque (25 lb-in.) Direct Coupled Rotary Actuator with two line voltage rated auxiliary switches and without time-out function.
ML7275D: Low Torque (25 lb-in.) Direct Coupled Rotary Actuator without auxiliary switches and with time-out function.
ML7275F: Low Torque (25 lb-in.) Direct Coupled Rotary Actuator with two line voltage auxiliary switches and with time-out function.

Electrical Ratings
Power Input: 24 Vac ± 20%, 50/60 Hz
Power Consumption:
ML7275A-C: 12 VA maximum at 24 Vac
ML7275D,F: 12 VA maximum at 24 Vac

Auxiliary Switch Ratings
120, 240 Vac: 3 AFL, 18 ALR, 1A pilot duty

Cable ratings
Control: Standard models include nonplenum UL/CSA rated, 30V, 60°C, 20 gauge cable
Auxiliary Switch: UL/CSA rated 300V 90°C, 18 gauge

Control Inputs
0 to 10 Vdc, 2 to 10 Vdc or 4 to 20 mA
All models have 2 to 10 Vdc feedback signal

Torque Ratings at Rated Voltages
Lift and Hold: 25 lb-in. (3 N•m)
Breakaway Minimum: 25 lb-in. (3 N•m)
Stall Minimum: 25 lb-in. (3 N•m) spring return
Stall Maximum: 100 lb-in. (11.3 N•m)

Actuator Stroke
95° Nominal ± 2°, mechanically limited

Actuator Timing at 90° Stroke
88 ± 2 seconds synchronous at 60 Hz from 0°F to 140°F
106 ± 2 seconds at 50 Hz
Spring Wind Timing Upon Power Restoration Only:
100 seconds nominal at 60 Hz, 120 seconds at 50 Hz
Spring Return Timing:
30 seconds maximum per 90° at 72°F at rated load
10 minutes maximum at -30°F at rated load

Ambient Temperature Range
-30°F to +140°F (-35°C to +60°C)

Storage Temperature
-30°F to 150°F (-35°C to 65°C)

Humidity
5 to 95 percent relative humidity, noncondensing

Mounting
Mounts directly on horizontal 3/8 in. to 5/8 in. (12 to 16 mm) round or square damper shaft. Minimum shaft length required:
- 3.5 in. (76 mm) when the shaft attachment is made on the side of the actuator opposite the duct
- 0.65 in. (16 mm) when the hub is mounted on the shaft before the actuator is installed

Most actuators are shipped with specifically sized hubs. Some models contain an assembly with assorted hub inserts. Mounting bracket is included with most models.

Dimensions
See Fig. 1

ORDERING INFORMATION

When purchasing replacement and modernization products from your TRADELINE® wholesaler or distributor, refer to the TRADELINE® Catalog or price sheets for complete ordering number, or specify:
1. Model number.
2. Application.

If you have additional questions, need further information, or would like to comment on our products or services, please write or phone:
1. Your local Honeywell Home and Building Control Sales Office (check white pages of your phone directory).
2. Home and Building Control Customer Logistics
Honeywell Inc., 1885 Douglas Drive North,
Golden Valley, Minnesota 55422-4386 (612) 951-1000

In Canada—Honeywell Limited/Limitée, 155 Gordon Baker Road, North York, Ontario M2H 2C9. International Sales and Service offices in all principal cities of the world.

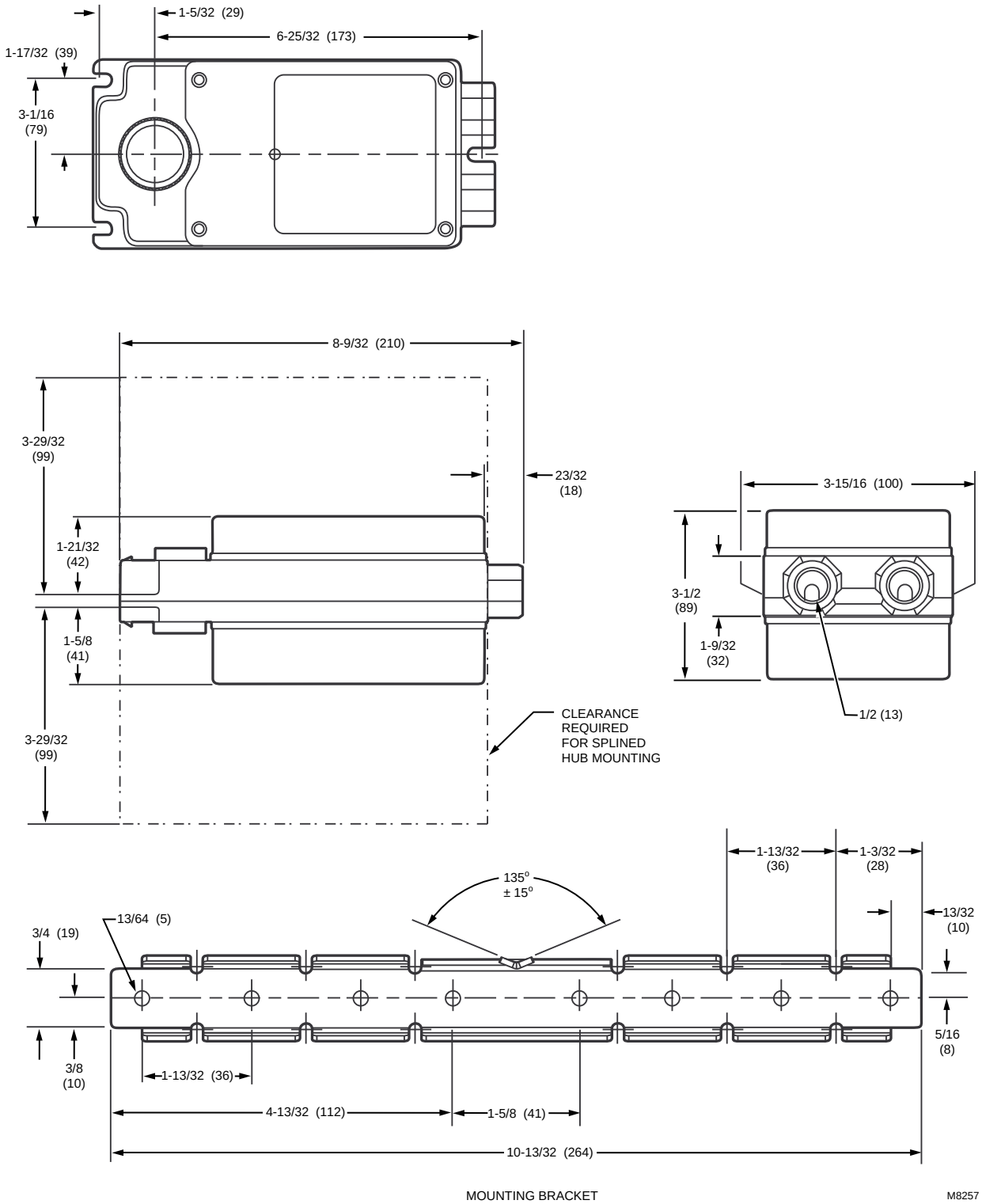

Fig. 1. Approximate dimensions of ML7275 Spring Return Direct Coupled Actuator and mounting bracket in in. (mm).

Device Weight
4.0 lb (1.82 kg)

Noise Rating
Driving Only: 45 dBA maximum at 1.0m

Spring Rotation
Clockwise (cw); counterclockwise (ccw) by reverse mounting

Position Indicator
Mounted on actuator hub

Actuator Design Life
Full Stroke Cycles: 60,000
Repositions: 1,500,000
Spring Return Cycles: 7,500

Approvals
UL94-5V Enclosure Plenum rating
UL873 Line voltage auxiliary switches.
CSA: File Number: E4436; Guide Number: XAPX

Environmental Protection Ratings
NEMA1 standard with shaft in the horizontal position

Mounting Tab
For use with Universal mounting bracket

Accessories:
205820A 3-Point Mounting Kit
205830A Crank-Arm Accessory
205753 Hub Sleeve, 3/8 in.
205758 Hub Sleeve, 5/8 in.

INSTALLATION

When Installing this Product…

1. Read these instructions carefully. Failure to follow them could damage the product or cause a hazardous condition.
2. Check the ratings and description given in this specification to make sure the product is suitable for your application.
3. Installer must be a trained, experienced service technician.
4. After installation is complete, check out product operation as provided in these instructions.

⚠ CAUTION

1. Disconnect power before installation to prevent electrical shock or equipment damage.
2. Never turn motor output hub by hand or with a wrench.
3. Do not install actuator in areas with acid fumes or other deteriorating vapors that might attack the metal parts of the actuator.
4. Do not install actuator in areas with escaping gas or other explosive vapors that could be ignited by a spark from the actuator or attached accessories.

Location

Install the actuator in any location free from acid fumes or other deteriorating vapors that might attack the metal parts of the actuator. Make sure the location is not subject to escaping gas or other explosive vapors that could accidentally be ignited by a spark from the actuator or its attached parts.

Install the actuator in a location that allows enough clearance for mounting accessories and for servicing.

Mounting

The ML7275 Direct Coupled Actuator is designed to operate a damper by driving the damper shaft either cw ↷ or ccw ↶ depending on damper design. All actuators are shipped in the fully closed (cw or ccw, depending on view) position.

The ML7275 Direct Coupled Actuator is designed for single-point mounting when using an adapter bracket. Single-point mounting is typically used when the actuator is mounted on the damper frame.

A mounting bracket (see Fig. 1) is provided with some models to aid in installing the actuator. The bracket can be bent to any shape to support the actuator at the correct height.

The ML7275 Direct Coupled Actuator can also be three-point mounted, using the two front gear housing slots and the adapter bracket. Two screws are secured through the two front gear housing slots and the adapter bracket positioned to secure the rear of the actuator. Three point mounting is used for foot mounting the actuator or mounting the actuator internally in the duct, when direct shaft coupling is not possible.

⚠ CAUTION

Do not use the actuator as a shaft bearing. The actuator must be used only to supply rotational torque. To prevent damage to the actuator, avoid any side loads to the actuator output coupling bearings.

Preparation

Before installing the ML7275 on the damper shaft, determine the opening direction of the damper shaft to determine the correct spring return rotation and correctly connect the wiring. The ML7275 can be mounted to provide clockwise or counterclockwise spring return. Reverse the actuator if necessary to provide the desired spring action.

Installation

Installing the Actuator and Mounting Bracket
(Single Point Mounting)

When the direction of the damper shaft rotation is determined (either cw ↷ or ccw ↶), proceed as follows:

❶ Place the ML7275 Direct Coupled Actuator over the damper shaft.
❷ Position the actuator for best access to the actuator damper shaft locking screw.
❸ Install the mounting bracket (see Fig. 2) and adjust it to support the actuator at the correct height. Mark the screw holes for installing the mounting bracket on the damper housing.
❹ Remove the mounting bracket and actuator.

5. Drill or center punch the starting holes for the mounting bracket screws (or use no. 10 self-tapping sheet metal screws).
6. Place the actuator and mounting bracket back into position over the damper shaft and install the mounting bracket screws.
7. Tighten the two 8 mm by 12 mm long set screws firmly against the damper shaft (maximum tightening torque is 100 lb-in.).

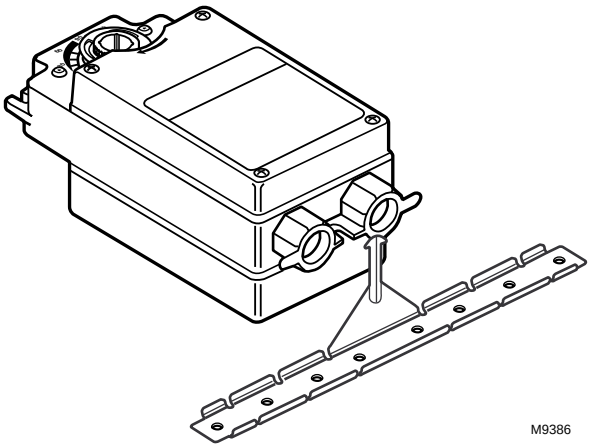

Fig. 2. Installing mounting bracket on ML7275 Direct Coupled Actuator.

Installing the Actuator for Three-Point Mounting

The ML7275 Direct Coupled Actuator is designed with removable hub sleeves to accommodate specific damper shaft sizes. Proper sleeve selection is necessary when three-point mounting is used to avoid excessive strain on the output gear. Most ML7275 Actuators are shipped with a 1/2 in. hub sleeve. For field use, several hub sleeve sizes are available. See the Accessories listing in the Specifications section. Shaft sizes are stamped on the sleeves.

The ML7275 Direct Coupled Actuator can be mounted directly on the motor shaft with the actuator in any position when the actuator housing is parallel with the damper housing or frame. (See Fig. 7.)

The ML7275 Direct Coupled Actuator has a reversible output hub. The hub is factory-mounted on the top of the actuator gear housing. When attaching to damper shafts less than 3.5 in. (76 mm) long, or for ease of mounting, the output hub can be mounted to the inside of the actuator gear housing. See Fig. 3. Be careful when removing the retaining ring that secures the output hub to the actuator housing. Use a flatheaded screwdriver to pry the ring loose.

Other possible mounting configurations and standard connections are shown in Fig. 4 through 7.

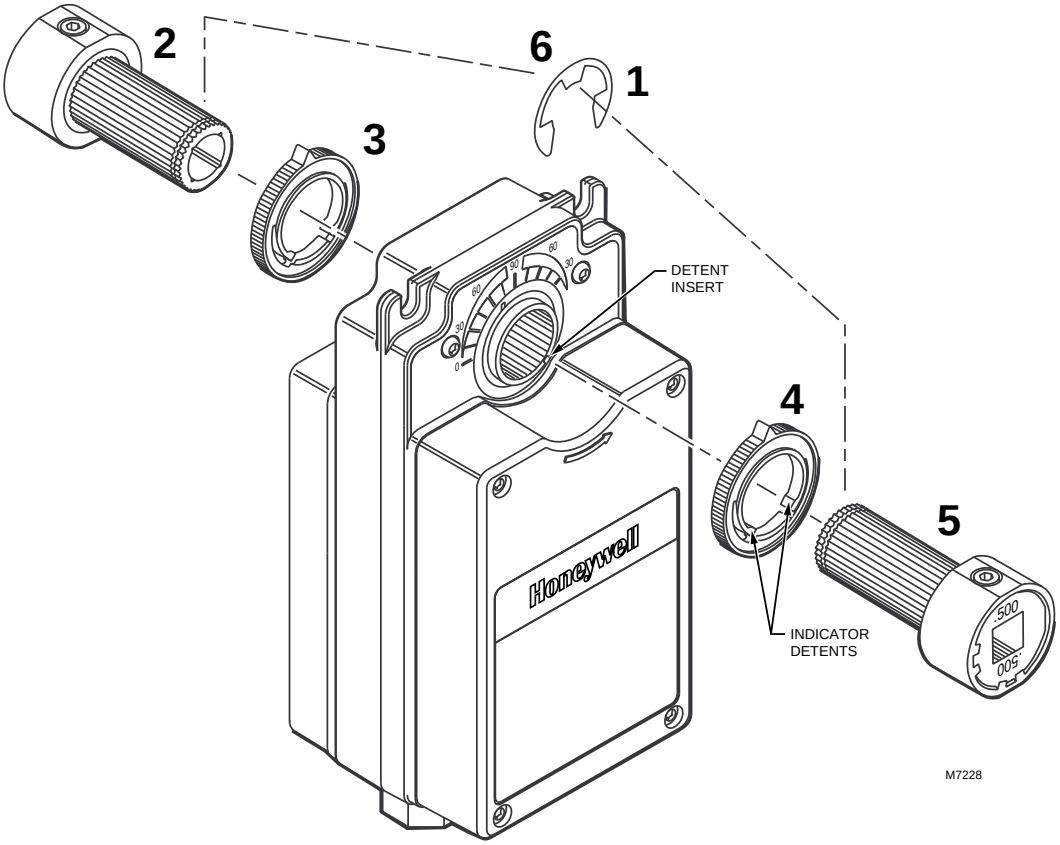

Fig. 3. Mounting hub to inside of actuator.

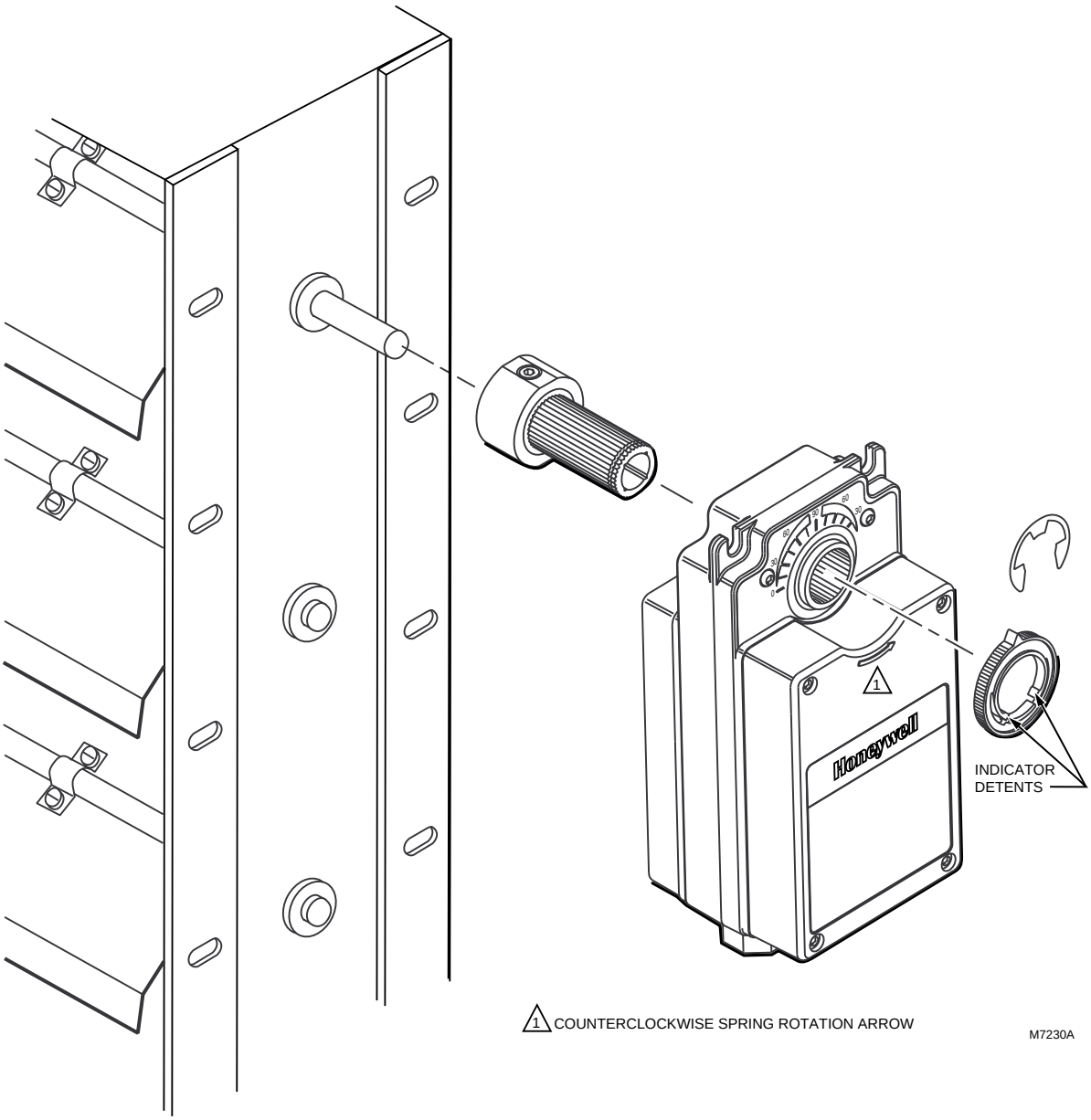

Fig. 4. ML7275 Actuator mounted for counterclockwise spring rotation with output hub inside actuator. (NOTE: NEMA rating applies only with damper shaft in horizontal position.)

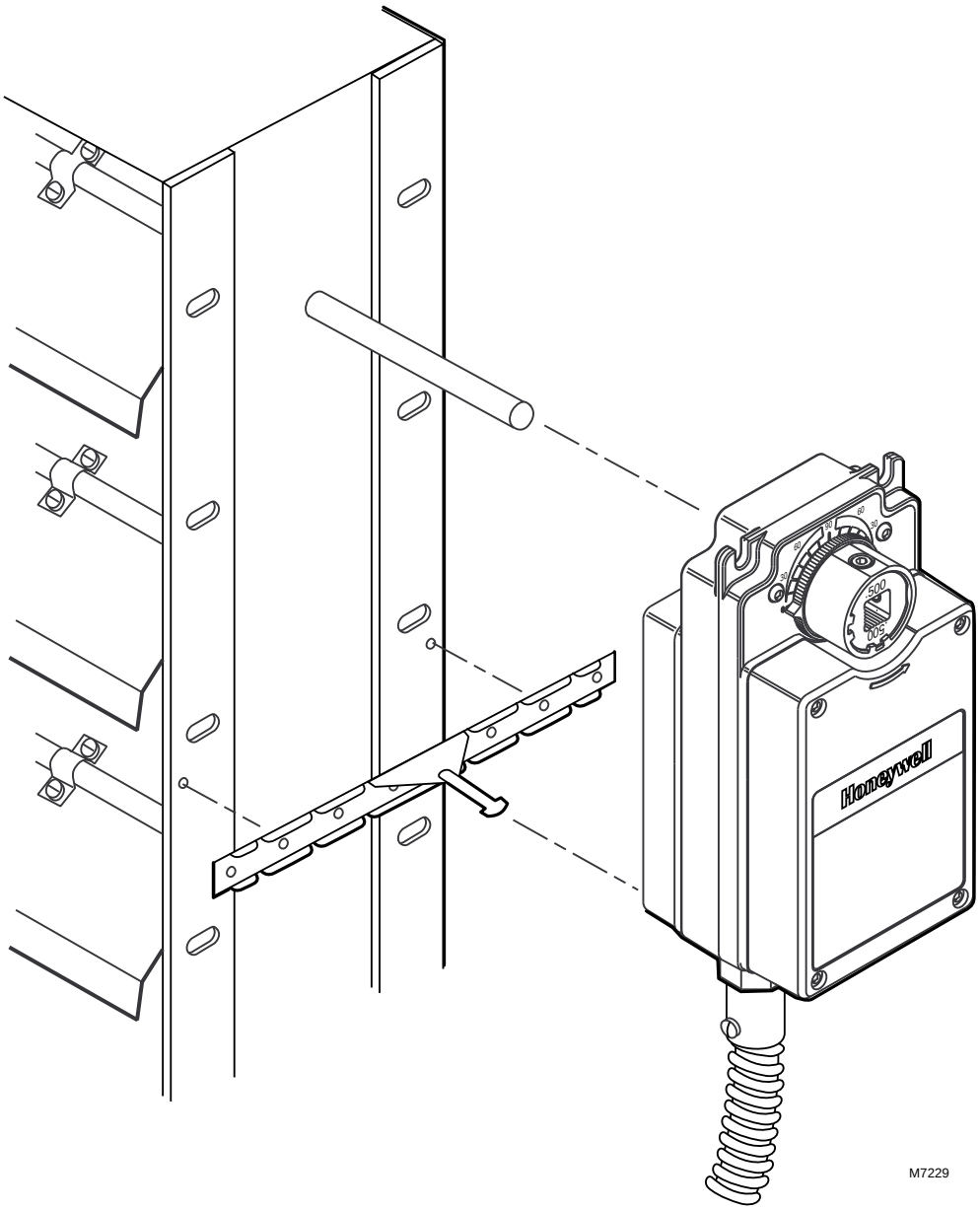

Fig. 5. Standard direct coupled mounting of ML7275 to a damper with counterclockwise spring rotation.

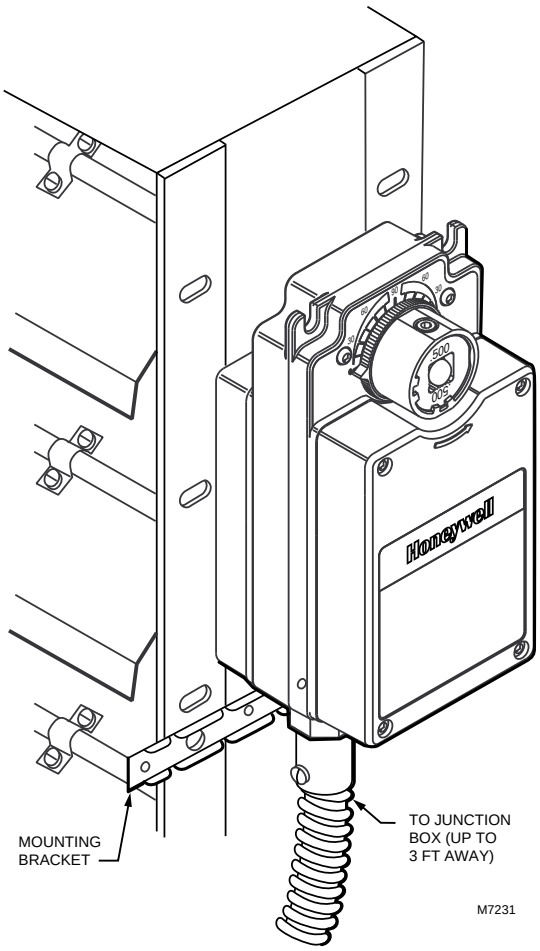

Fig. 6. ML7275 Actuator standard electrical connection.

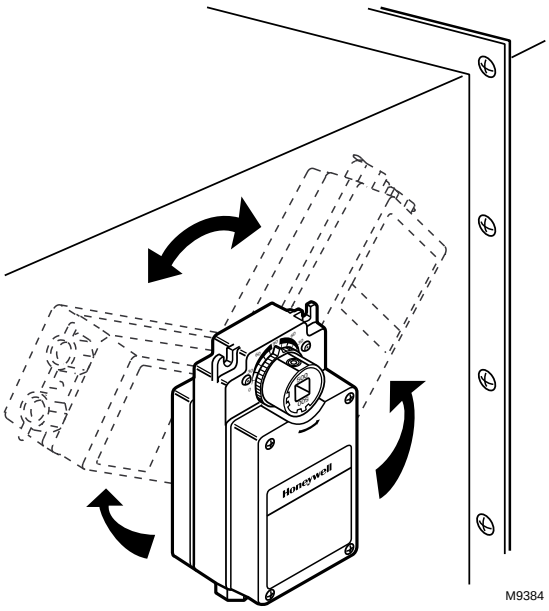

Fig. 7. ML7275 Actuator can be mounted in any position. (Note: NEMA rating applies only with damper shaft in the horizontal position.)

Wiring

⚠ CAUTION

Disconnect power supply before wiring to prevent electrical shock or equipment damage.

All wiring must comply with local electrical codes, ordinances and regulations. The ML7275 is designed for use with a Class 2 power supply. Voltage and frequency of the transformer used must correspond to the characteristics of the motor and those of the power supply. See Fig. 8 for a typical wiring connection.

The ML7275 has an aluminum die cast housing with two integral cast bosses on the end of the device, tapped for 1/2 in. conduit fittings. Some models are shipped with a water seal in the conduit opening. When conduit is needed, remove the seal before routing the cable.

ML7275 Models with Factory-Mounted Auxiliary Switches (see Fig. 9)

ML7275C,F models have two nonadjustable line voltage rated spdt auxiliary switches that are factory set to make common to normally open at 12° and 82° rotation from the counterclockwise stop. See Fig. 9.

IMPORTANT

Actuators driving in parallel can not be synchronized with each other. In normal operation, if all actuators are driven to the fully open or fully closed position, the actuators will again be synchronized.

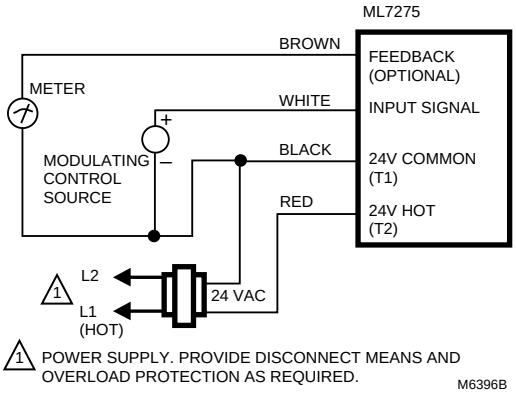

Fig. 8. ML7275 typical wiring diagram.

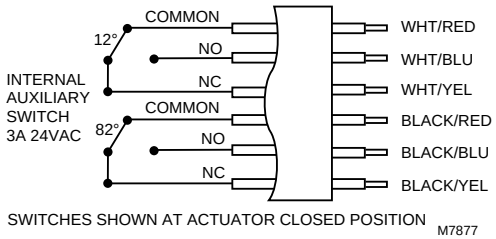

Fig. 9. ML7275C,F wiring for auxiliary switches.

Connecting Multiple Actuators

ML7275 Actuators may be stacked on one damper shaft to increase the output torque required to drive dampers larger than 16 square feet.

To make sure proper phasing occurs, connect all four leadwires (red, black, brown and white) in parallel. The number of actuators that may be wired in parallel is dependent on the transformer VA rating. Make certain that the connected load does not exceed the current capacity of the controller/thermostat. See Fig. 10, 11 and 12.

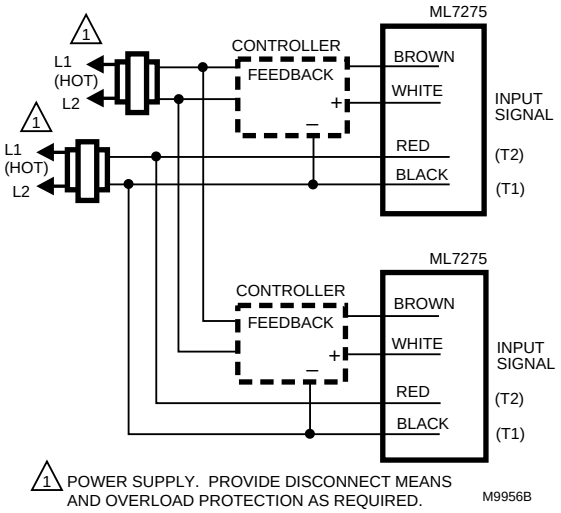

Fig. 10. Wiring two 0 to 10 Vdc, 2 to 10 Vdc or 4 to 20 mA controller outputs and two actuators with separate transformers.

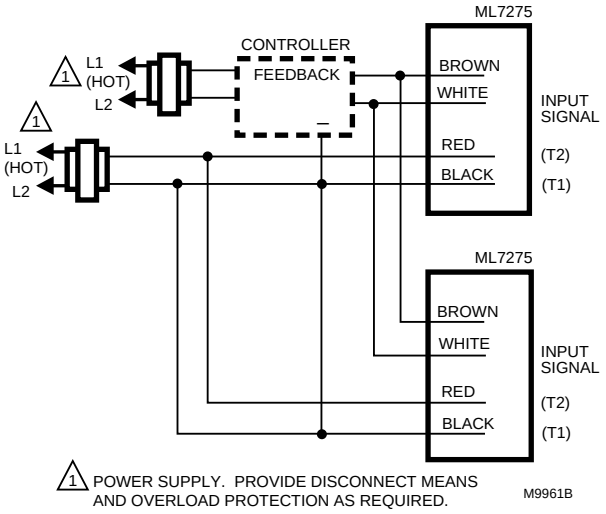

Fig. 11. Wiring one 0 to 10 Vdc or 2 to 10 Vdc controller output and two actuators.

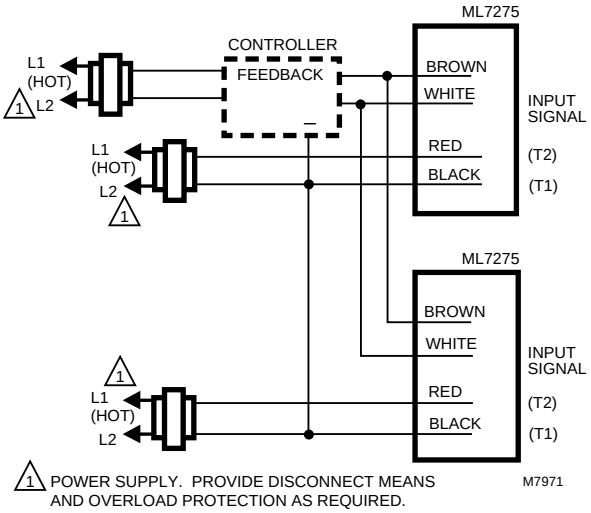

Fig. 12. Wiring two ML7275 Actuators in series with a single 4 to 20 mA controller and separate transformers.

NOTE: Actuators must be powered by a transformer separate from the controller power supply.

OPERATION

The ML7275 Direct Coupled Actuator is designed to be used in ventilating and air conditioning installations to operate dampers, ventilation flaps and louvers requiring up to 25 lb-in. torque. If the power fails, the actuator will spring return to the start position. The actuator is designed for reversible mounting. Arrows are molded into the covers to show the spring return direction. The larger cover shows a counterclockwise (ccw) spring rotation; the smaller cover shows a clockwise (cw) spring rotation.

The ML7275 Direct Coupled Actuator is operated by a proportional controller. When using a proportional controller, the actuator will be driven toward its fully open position when the input signal increases and will drive toward the fully closed position when the input signal decreases. The motor stops when the input signal reaches the desired proportional control point.

IMPORTANT

The ML7275 is designed to respond to instantaneous contact closures from a DDC Controller. Be careful not to short cycle the actuator. Unstable damper control can cause premature actuator failure.

The actuator has a position indicator to show shaft position. As the indicator moves with the shaft, it gives an angular representation of the damper position. There are four distinct positions where the indicator can be placed. The indicator can be removed (by first removing the output hub) to provide proper damper orientation. The indicator can be indexed to show cw or ccw open or closed, using the detents that are 90° apart. See Fig. 13. If the spring return position is the open position, rotate the indicator until it points to 90 on the scale. If the spring return position is the closed position, rotate the indicator until it points to 0 (zero) on the scale. A detent can be felt at both stops. The detents maintain the indicator position.

The ML7275D and ML7275F models provide a time-out function that removes power from the actuator sub-motor if the actuator remains in one position (closed, open, or any intermediate position) for longer than a nominal 100 seconds. This time-out function helps to extend actuator life.

IMPORTANT

The ML7275 was designed to provide 7500 spring returns. Therefore, the actuator may be unpowered daily for night shutdown control. However, rapidly cycling the actuator by removing control voltage will lead to premature spring failure.

CHECKOUT

The ML7275 Direct Coupled Actuator can be checked out either directly or by using a controller.

IMPORTANT

When power is interrupted, the actuator returns to the normal starting position using the spring mechanism. When power is restored, the controller input does not operate the actuator until the spring is fully wound and locked. The spring winding process takes approximately 100 seconds, depending on the number of degrees of spring return remaining at power interrupt (e.g., 10° of spring return remaining takes 10 seconds). If the actuator is not in the closed position, it runs to the closed position when the spring is winding. Once the spring is locked in its fully wound position, the actuator responds to inputs on the white leadwire.

Direct Checkout

1. Mount the actuator for the required application (either cw ↷ or ccw ↶ rotation to open the damper).
2. Check the damper position and make sure that 24 Vac is present on the red and black leadwires.
3. Make sure the actuator spring is fully wound and locked by applying power for at least 100 seconds.
4. Apply the control signal to the appropriate leadwires (white, black) to move the damper to the opposite position. The ML7275 should drive the damper.
5. If the actuator does not run, verify that the actuator is properly installed for either cw ↷ or ccw ↶ rotation.
6. If the actuator is correctly installed and still does not run, replace the actuator.

Controller Checkout

1. Adjust the setpoint of the controller to call for cooling. Observe the actuator.
2. If the damper is closed, it should begin to open.
3. If the damper remains closed, move the setpoint of the controller farther below the room temperature.
4. If the damper still does not move, check for the presence of 24 Vac on T1 and T2.
5. Make sure the actuator spring is fully wound by applying power for at least 100 seconds.
6. If 24 Vac is present and the actuator does not operate, reverse the controller leadwires to determine if the device was miswired.
7. If the wiring is correct and 24 Vac is present on the input terminals- but the actuator does not run, replace the actuator.

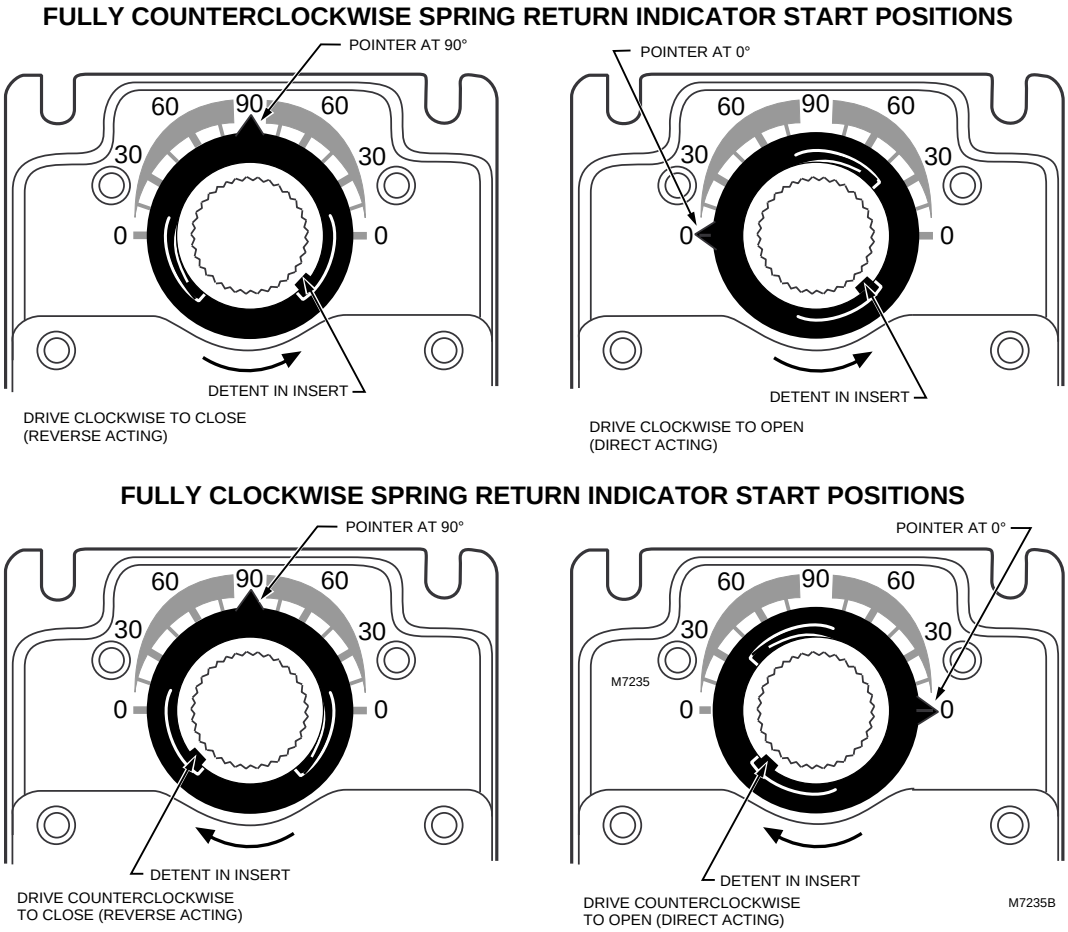

Fig. 13. ML7275 indicator start positions.

Home and Building Control
Honeywell Inc.
Honeywell Plaza
P.O. Box 524
Minneapolis MN 55408-0524

Home and Building Control
Honeywell Limited-Honeywell Limitée
155 Gordon Baker Road
North York, Ontario
M2H 2C9

Honeywell Asia Pacific Inc.
Room 3213-3225
Sun Hung Kai Centre
No. 30 Harbour Road
Wanchai
Hong Kong

Honeywell Latin American Division
Miami Lakes Headquarters
14505 Commerce Way Suite 500
Miami Lakes FL 33016

Honeywell Europe S.A.
3 Avenue du Bourget
B-1140 Brussels Belgium

Honeywell

Helping You Control Your World

63-2492—2 G.R. Rev. 7-96 Printed in U.S.A.