Single/Dual Output Room Temperature Controllers

These temperature controllers are used in heating and air conditioning systems.

Features:

- Dual output adapters for TP-8101 and TP-8102.
- TP-8124 meets ASHRA 90-75 DOE requirements.
- Heating and cooling cannot operate simultaneously.
- Heating/cooling deadband obtained by adjustable dual setpoints and throttling range.
- Concealed adjustments to eliminate occupant tampering.

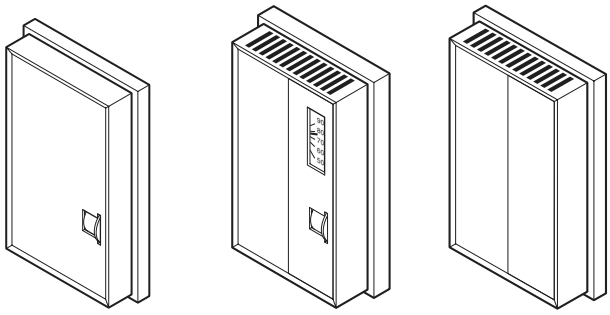

TP-810X TP-810X TP-8121 TP-8124

Model Chart

Model No.	Control Dial Range		Description	Throttling Range for 3 Vdc Output Change	Power Requirements	Output Voltage
	Temp.	Null-band				
TP-8101	55 to 85°F	—	Single setpoint with single output signal room controller	2, 3, 6 and 20 F°; factory set 3 F° by jumper/pins	20 Vdc (-1.5/+1) 13mA	2 to 15 Vdc or 15 to 2 Vdc[a]
TP-8101-116	13 to 29°C					
TP-8102	45 to 75°F					
TP-8102-116	17 to 24°C					
TP-8121	55 to 85°F	2 to 14°F (1.1 to 8°C); factory set at 3 (1.7)	Single setpoint with dual output signal room controller	Heating & cooling 2 to 10 F°, independently adj; factory set 3 F°	20 Vdc (-1.5/-1) 23 mA	Heat (OP1) 2 to 15 Vdc or 15 to 2 Vdc[b]; cool (OP2) 2 to 15 Vdc
TP-8124 TP-8124-770	Dual Scale Heating 45 to 75°F Cooling 70 to 100°F	Difference between heating & cooling setpoints	Dual setpoints and dual output signals with deadband between heating and cooling room controller			

[a] Units factory calibrated for 7.5 Vdc output with sensor at setpoint temperature providing a 6 to 9 Vdc output signal over the selected throttling range..

[b] Units factory calibrated for 6 Vdc (R.A. HTG), 9 Vdc (D.A. HTG) and 6 Vdc (D.A. CLG) with sensor at setpoint temperature.

Power Supply, Wiring, Control Action, and Number of Controlled Devices.

Model No.	Power Supply	Wiring	Control Action	Number of Controlled Devices
TP-8101	6.2 Vdc 2.2 mA max.	Three color coded pigtail leads, terminals; for options refer to Figure 4.	Factory set direct acting jumper terminal 4 to 5; for reverse acting jumper terminal 4 to 3	Six System 8000 devices or two MP-5200 series actuators
TP-8101-116				
TP-8102				
TP-8102-116				
TP-8121	—	Coded terminals; refer to Figure 5 and Figure 6.	Heating factory set reverse acting, jumper J7 to pin B for direct acting; cooling direct acting only	Six System 8000 devices or two MP-5200 series actuators in both heating and cooling
TP-8124 TP-8124-770				

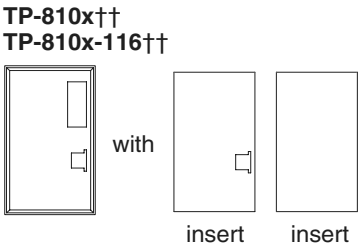

Figure 1 Standard Cover with Inserts.

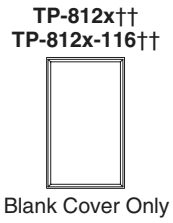

Figure 2 Blank Cover Only.

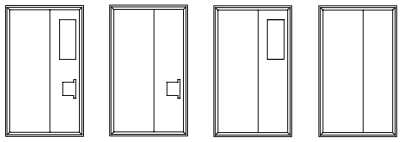

F	**TP-810x-399**	**-400**	**-403††**	**-404††**
C	**TP-810x-398**	**-410**	**-413††**	**-414††**

††5/64 in. Allen screw used to secure cover.

Figure 3 Options for Quantities of 24 or More of Each Part Number.

Specifications

Construction	Self-contained room controller with a 1000 Ω Balco sensing element with single or dual output(s).
Ambient temperature limits	Shipping and storage: -40 to 160°F (-40 to 71°C). Operating: 40 to 140°F (4.4 to 60°C).
Connections	Coded screw terminals. T-8101 and TP-8102 have 6 in. color coded pigtails in addition to coded screw terminals.
Cover	Beige colored plastic.
Locations	NEMA Type 1.
Mounting	Panel assembly order AD-8953 mounting track separately.
Dimensions	4-3/8 H x 2-3/4 W x 1-5/8 D in. (111 x 70 x 41 mm).
General Instructions	Refer to F-18097. **TP-8121, 8124**: Refer to F-22615.

Accessories

Model No.	**Description**
AT-504	Plaster hole cover kit (small).
AT-505	Surface mounting base.
AT-546	Auxiliary mounting plate.
AT-1103	Wire guard.
AT-1104	Cast aluminum guard.
AT-1155	Plastic guard.
AT-1165	Plastic guard.
TP-810x only	
AD-8122	Signal adaptor for dual outputs (two direct acting).
AD-8123	Signal adaptor for dual outputs (one direct, one reverse acting).
AD-8124	Signal adaptor for dual outputs (one reverse, one direct acting).
AD-8953	Mounting track.
AD-8969-201	Offset resistor kit; 5, 10, 15 and 20°F.
AD-8969-901	Extended throttling range jumper.
AT-61 Series	Brushed bronze cover plates.
AT-101	Lock cover kit.
AT-104	Dial stop pins.
AT-602	Selector switch sub-base DP4T.
AT-603	Selector switch sub-base DP4T, one DPDT.
AT-8122	Remote setpoint adjuster, dual scale 20 to 120°F (-6 to 49°C).
AT-8155	Remote setpoint adjuster, dual scale 50 to 250°F (10 to 121°C).
AT-8158	Remote setpoint adjuster, dual scale 55 to 85°F (13 to 29°C).
TS-8131	Room button type sensor.
TS-8201	Duct/immersion sensor.
TS-8261	Light fixture sensor.
TS-8405	5 ft. (1.5 m) averaging sensor.
TS-8422	22 ft. (6.7 m) averaging sensor.
TS-8601	Selective ratio discharge sensor.

Typical Applications

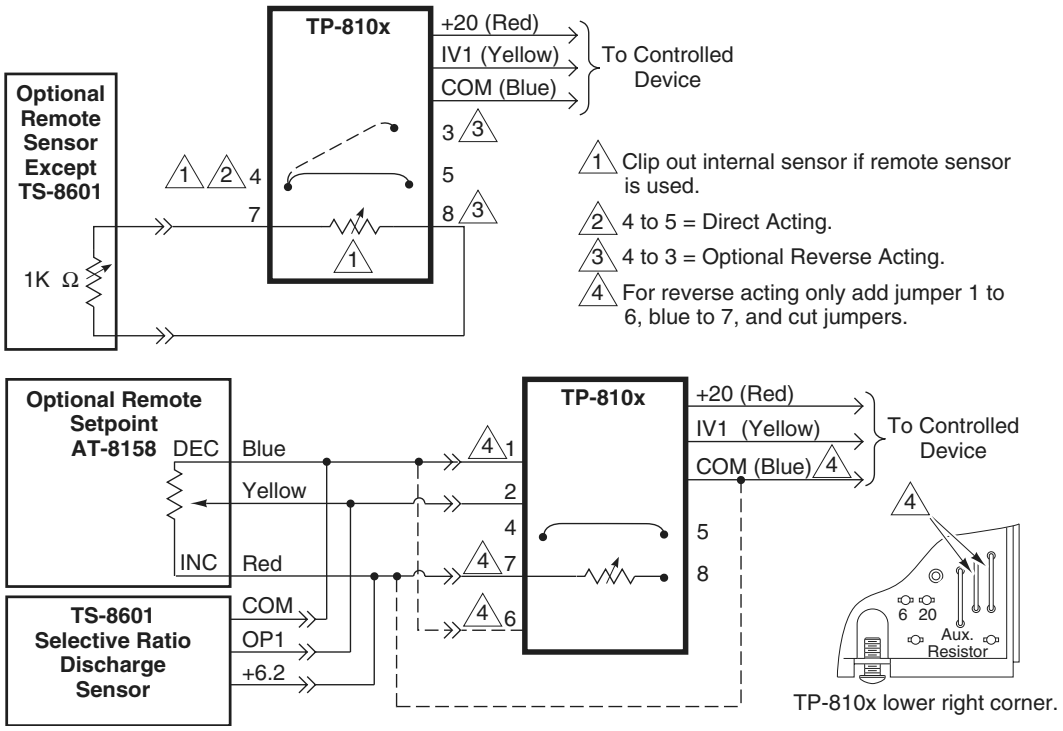

Figure 4 TP-810x Terminals and Typical Wiring.

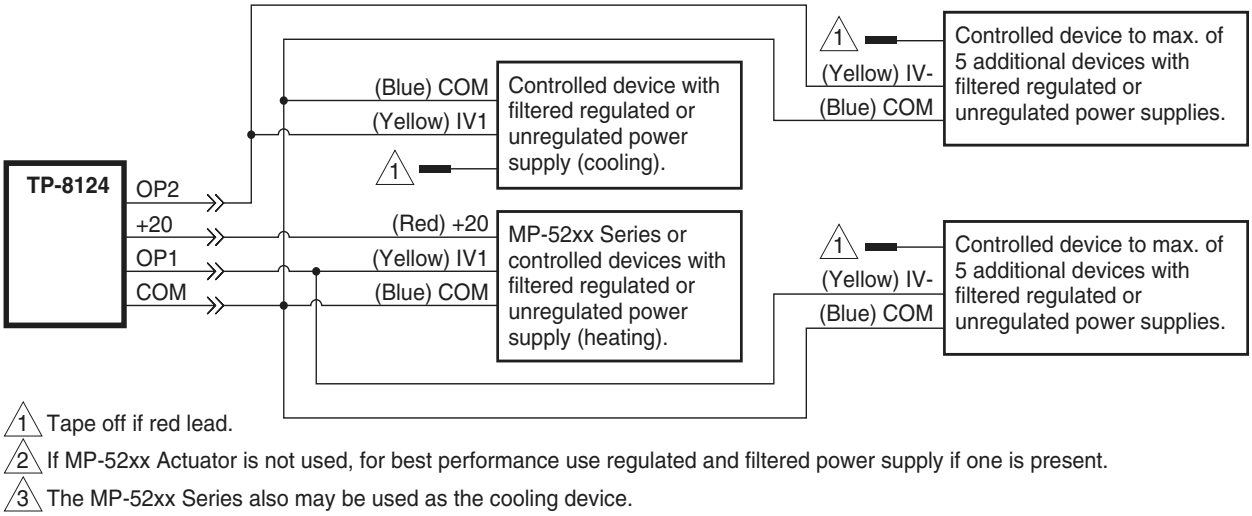

Figure 5 TP-8124 Typical Wiring with One MP-52xx Actuator.

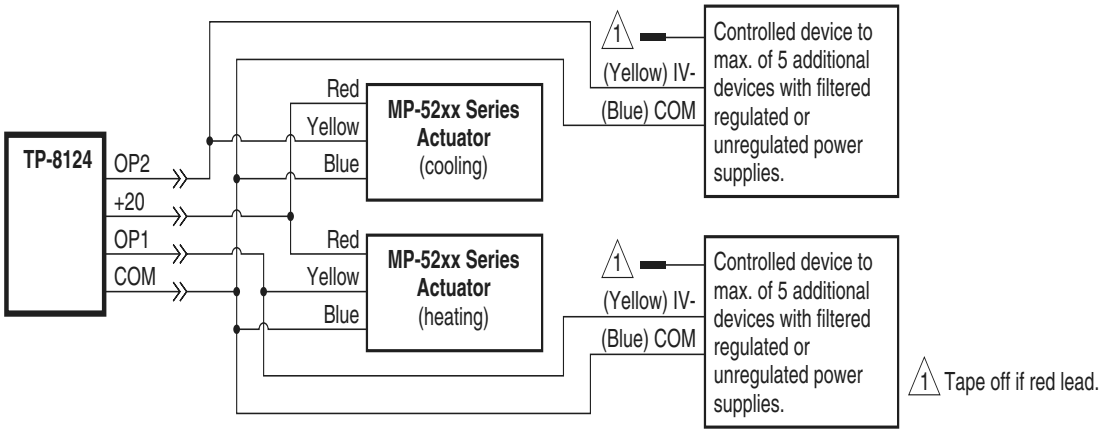

Figure 6 TP-8124 Typical Wiring with Two MP-52xx Actuators.