Electronic to Pneumatic Transducer

The CP-8551 and CP-8552 transducers receive a variable electronic input signal and produce a 3 to 15 psig (21 to 103 kPa) pneumatic output signal to position pneumatic damper and valve actuators in HVAC systems.

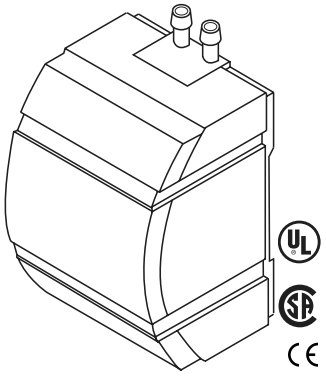

Features:

- Durable enclosure with easily accessible wiring terminations.
- Panel or DIN rail mounting for quick, snap-on installation.
- Two-wire loop powered or three-wire voltage input.
- High accuracy with low hysteresis.
- Long-term driftless operation with high repeatability.
- Low air consumption and large air flow capacity.
- Control input protection from short circuit or reverse polarity.

Model Chart

Model No.[a]	Input Signal	Input Impedance Ohms	Power Requirements
CP-8551	4 to 20 mA	550 maximum, 400 minimum	None
CP-8552	4 to 20 mA	550 maximum, 400 minimum, 4 to 20 mA input, >10,000 Vac input	None
	6 to 9 Vdc, 0 to 10 Vdc		20 to 30 Vac, 24 to 30 Vdc, 3.9 VA, 1.6 W

[a] CAUTION: This product contains a half-wave rectifier power supply and must not be powered off transformers used to power other devices utilizing non-isolated full-wave rectifier power supplies. Refer to EN206 F-26363.

Specifications

Input signal	Refer to Model Chart.
Rectifier type	Half wave, not isolated.
Input range adjustment	CP-8551: Fixed, 16 mAdc. CP-8552: Jumper selectable. Refer to Model Chart.
Power supply	0 to 10 and 6 to 9 V: Requires 20 to 30 Vac, 3.9 VA (CP-8552), 50/60 Hz, or 24 to 30 Vdc power supply, 1.6 watts maximum.
Air supply required	20 psig (138 kPa) nominal, 30 psig (207 kPa) maximum. Clean, dry, oil free air required (reference EN-123, F-22516).
Air consumption for sizing air compressor	Maximum 0.012 scfm (5.66 ml/s) at 20 psig (138 kPa) supply.
Air capacity for sizing air mains	Minimum 550 scim (150.24 mL/s).
Air connections	Male barbed fittings for flexible 1/4” O.D. pneumatic tubing.
Wiring connections	Screw terminals for 16 to 22 AWG wire.
Output signal	3 to 15 psig (21 to 103 kPa) nominal, direct acting.
Adjustments	CP-8551: None. CP-8552: 4 to 20 mA range, none; 0 to 10 and 6 to 9 V range, adjustable start point and span potentiometers.
Maximum pneumatic output	1 to 18 psig (7 to 124 kPa).
Maximum air capacity	515 scim (141 ml/s) maximum with a 20 psig (138 kPa) supply.
Operating characteristics	
Linearity	±1% of span at 75°F (24°C).
Hysteresis	0.75% of span at 75°F (24°C).