System 8000 Controlled Relays

Electronic controlled relays are offered in dual, or dual with one having heat anticipation for time proportional control of electric heat.

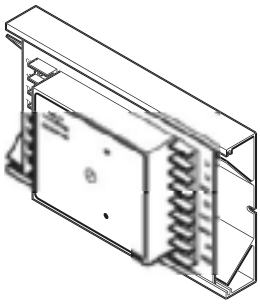

Features:

- Stages individually adjustable.
- Large selection of operational differentials available.
- Uses standard track mounting.
- Can accommodate two individual inputs.

Model Chart

Model No.	Input Signals	Description	Power Requirements Vac (50/60 Hz) (+10/-15%)	Relay			
				Relay 1 Dropout	Deadband (Differential)	Pull-in	Relay 2 (CC-8103 Only) Time Proportioning
CC-8102	1 or 2	2 relays	120	Adjustable 2 to 12 Vdc (input signal); factory set 6 Vdc	Jumper selectable 1/2, 1, 2, 4 Vdc[a] (input signal); factory set 1 Vdc	Pull-in equals dropout plus deadband	Adjustable 2 to 12 Vdc (input signal) factory set to drop out at 8 Vdc
CC-8102-024[b]			24				
CC-8103		2 relays, 1 time proportioning	120	Adjustable 2 to 12 Vdc (input signal); factory set 10 Vdc			Non-adjustable 6 VDC input: 100% duty cycle 7.5 Vdc input: 50% duty cycle 9 Vdc input: 0% duty cycle
CC-8103-240			240				

[a] 1.5, 2.5, 3, 3.5, 4.5, 5, 5.5, 6, 6.5, 7, 7.5 Vdc differentials can be obtained with an AD-8969-901 (order separately).

[b] Not CSA certified.

Specifications

Input signals	One or two 2 to 15 Vdc input signals.
Relay	SPDT. Refer to Electrical Rating per Relay Table for electrical ratings.
Power requirements	Refer to Model Chart.
Power consumption	2.4 VA.
Power supply available	20 Vdc, 35 mA; filtered and regulated.
Environment	
Ambient temperature limits	Shipping and storage: -40 to 140°F (-40 to 60°C). Operating: 40 to 135°F (4 to 57°C).
Humidity	5 to 95% RH, non-condensing.
Locations	NEMA Type 1.
Connections	Coded screw terminals for 12 to 20 AWG.
Cover	Aluminum.
Mounting	Unit is provided with plastic track for panel mounting. AD-8912 enclosure can be ordered separately for remote installations.
Dimensions	3-7/8 H x 7-1/2 W x 2-1/2 D in. (98 x 191 x 63).
Agency Listings	CC-8102 and CC-8103: UL Recognized CSA. CC-8102-024: UL Recognized.
General Instructions	Refer to F-14966.

Electrical Rating per Relay.

Contact Rating	24 Vac	120 Vac	240 Vac
Amps (continuous)	—	1	0.5
Amps (inrush)	—	10	5
Pilot duty sealed (VA)	25	125	125
Pilot duty inrush (VA)	250	1250	1250

Accessories

Model No.	Description
AD-8969-901	Extended relay differential jumper.
AD-8912	Enclosure, 12 in. (305 mm).
TOOL-201	Calibration kit for System 8000.

Typical Applications

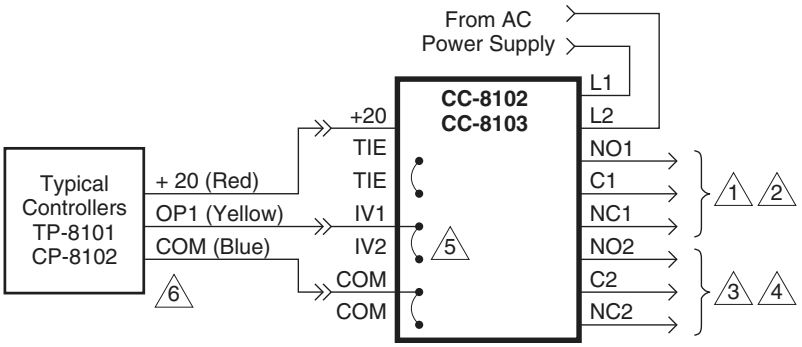

1. Relay No. 1 (CC-8102). Factory Set: Dropout: 6 Vdc; Differential: 1 Vdc.
2. Relay No. 1 (CC-8103). Factory Set: Dropout: 10 Vdc; Differential: 1 Vdc.
3. Relay No. 2 (CC-8103). Factory Set: Dropout: 8 Vdc; Differential: 1 Vdc.
4. Relay No. 2 (CC-8103). Factory Set: (non-adjustable); 6 Vdc input — 100% duty cycle; 7.5 Vdc input — 50% duty cycle (45 sec.); 9 Vdc input — 0% duty cycle.
5. Remove jumper for two input operation.
6. Relay Deadband F =

$$\frac{\text{Throttling Range F}}{\text{3 (Vdc)}} \times \text{Relay Differential (Vdc)}$$

Figure 1 Typical Wiring Diagram for CC-810x.