STE–5000 Series
Room Temperature Sensor

Description

The KMC STE–5000 series of room temperature sensors is designed for use in KMC Digital or other building automation systems. They incorporate a 10,000 ohm (@ 77° F) thermistor for the sensing element, providing precise, stable temperature sensing. Appealing with its low profile and durable thermostat style cover, these sensors may be surface or wall mounted to a 2" x 4" electrical box.

Many models are available to provide sensing with or without setpoint control by dial or push-button, push-button override or control and LED indication.

Features

- 10,000 ohm thermistor
- Low profile cover
- Models available with or without setpoint control, dial or push-button override and LED indication (See Models list)

Application

The KMC STE-5000 Series Temperature Sensors provide a 10,000 ohm temperature sensor for use in KMC Digital or other building automation systems.

Models

The following models are available

STE–5*11–10	Temperature sensor
STE–5*12–10	Temperature sensor w/°F setpoint
STE–5*12–11	Temperature sensor w/°C setpoint
STE–5*13–10	Temperature sensor w/keypad & L.E.D.
STE–5*14–10	Temperature sensor w/keypad, L.E.D. & °F setpoint
STE–5*14–11	Temperature sensor w/keypad, L.E.D. & °C setpoint
STE–5*15–10	Temperature sensor w/keypad, 3 L.E.D.s & °F setpoint
STE–5*15–11	Temperature sensor w/keypad, 3 L.E.D.s & °C setpoint
STE–5*16–10	Temperature sensor w/INCR-DECR push-buttons
STE–5*17–10	Temperature sensor w/INCR-DECR push-buttons, keypad & L.E.D.
STE–5*21–10	Temperature sensor w/keypad switch
STE–5*22–10	Temperature sensor w/keypad & °F setpoint
STE–5*22–11	Temperature sensor w/keypad & °C setpoint

* 0 = light almond

1 = ash white (STE–5115 & STE–5117 available as a special order only)

Accessories

The following accessories are available for the above models:

HMO–5014	Standoff, light almond
HMO–5016	Standoff, ash white
HMO–5036	Vertical backplate, light almond
HMO–5037	Vertical backplate, ash white
HMO–5038	Horizontal backplate, ash white
HMO–5039	Horizontal backplate, light almond
HPO–0031	Setpoint cover, ash white
HPO–0032	Setpoint cover, light almond

Specifications and design subject to change without notice.

Details

All dimensions are in inches (mm)

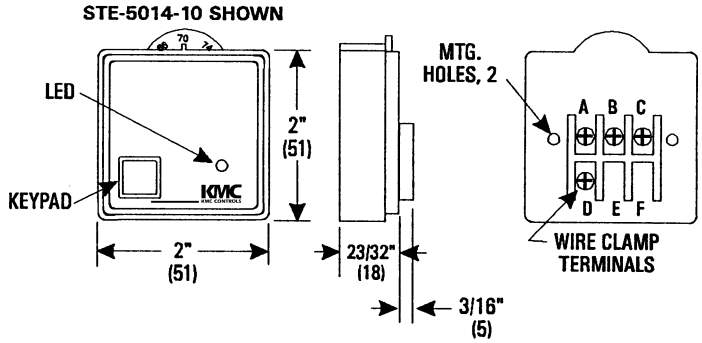

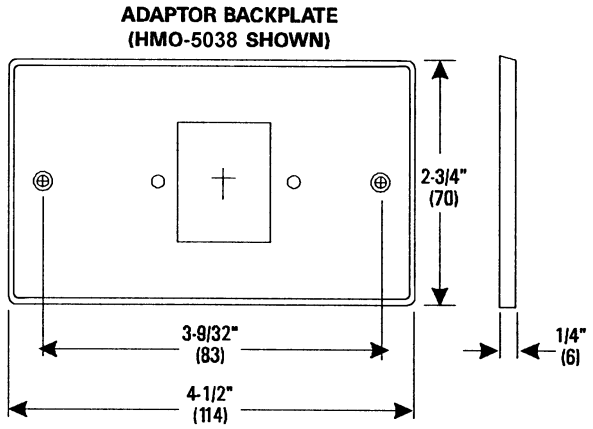

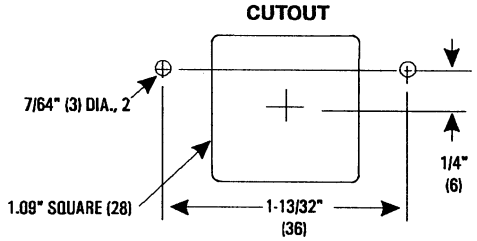

Specifications

Sensor

Accuracy	± 0.36°F (± 0.20° C)
Resistance	10,000 ohm@ 77° F (25° C)
NTC	4.37%/°C @25°C
Dissipation Constant	7 mW/°C
KMC Digital Range	#4/#5

Setpoint Potentiometer

Resistance	0–10,000 ohm/54°F–90°F (12°C–32°C) linear
Tolerance	±20%

Pushbuttons

Front	Momentary, shunts temp. sensor
Top	Momentary, right (increase) shunts sensor, left (decrease) opens sensor

LED(s)	Green, 10 VDC (12 VDC max)
Connections	Screw Terminals
Material	Ash white or light Almond ABS, UL Flame Class 94 HB
Weight	1.25 oz. (35 grams)

Temperature Limits

Operating	40° to 120°F (4° to 49°C)
Shipping	-40° to 140°F (40° to60°C)

KMC Controls, Inc.
19476 Industrial Drive
New Paris, IN 46553
574.831.5250
www.kmccontrols.com

© 2005 KMC Controls Inc.