CME–2001, 2002
Rotary Feedback Potentiometers

Description

The KMC CME–2001/2002 Rotary Feedback Potentiometers indicate the angular position of VAV terminal dampers and AHU dampers. Models are available in two ranges and mount to certain controller actuators, electric actuators or directly to damper shafts.

Potentiometers are gear driven from the CEP or MEP output drive or by the AHU damper shaft. Field installation to existing actuators is easy with a snap-on feature. For field mounting to damper shafts, order required kit HMO-4509.

Features

- May be attached to damper shafts or specific models of KMC control actuators or electric actuators
- Easy field upgrade snap-on feature.

Models

The following models are available:

CME–2001	10K ohms, 7,500 ohms for 90°
CME–2002	1K ohm, 750 ohms for 90°

KMC Rotary Feedback Potentiometers are intended for use with the following controller/electric actuators:

CEP–4000 Series

CSP–4000 Series

MEP–1500 Series

Details

All dimensions are in inches (mm).

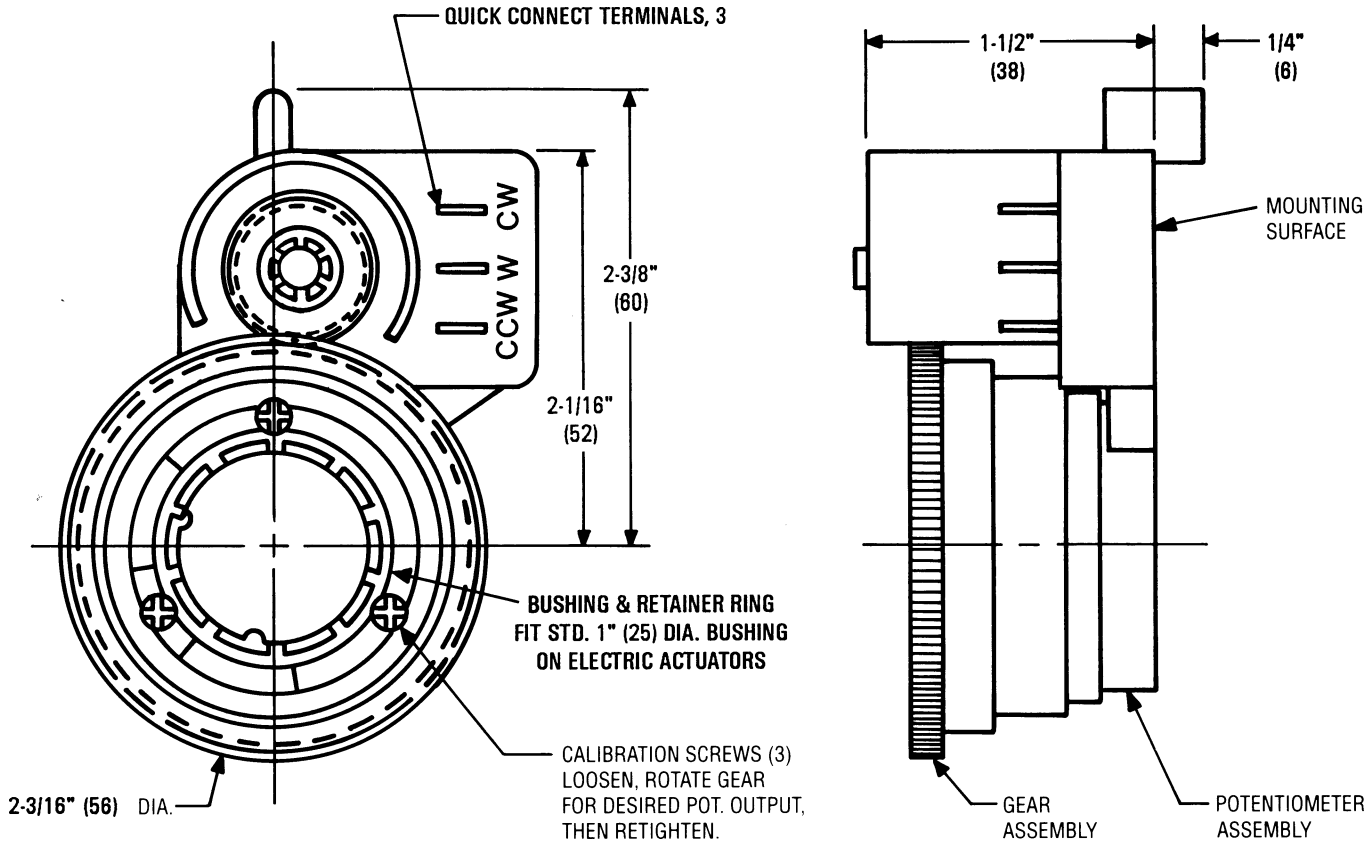

Specifications

Power Rating	1 Watt
Linearity	±1%
Accessories	HMO-4509 Field Mounting Kit directly to damper shaft
Material	Black Polycarbonate
Weights	2.4 oz. (71 grams)
Temperature Limits	
Operating	40° to 120°F (4° to 49°C)
Shipping	-40° to 140°F (-40° to 60°C)

KMC Controls, Inc.
19476 Industrial Drive
New Paris, IN 46553
574.831.5250
www.kmccontrols.com

© 2003 KMC Controls Inc.